THE TOWN OF Batesburg-Leesville

Town of Batesburg-Leesville

TITLE 4 – PUBLIC UTILITIES, CHAPTER 4
FATS, OIL, AND GREASE (FOG) CONTROL ORDINANCE FOR FOOD SERVICE AND OTHER ESTABLISHMENTS

DRAFT

Approved By Council Action

Date _____

Town of Batesburg-Leesville
120 West Church Street
Batesburg-Leesville, SC 29006

TABLE OF CONTENTS

		Page
ARTICLE A. – GENERAL PROVISIONS		24
Sec. 4-4-1.	Authority and control	24
Sec. 4-4-2	Definitions	25
Sec. 4-4-3.	Applicability	28
ARTICLE B. – GREASE RETENTION UNIT CONSTRUCTION STANDARDS		28
Sec. 4-4-4.	Design and construction	28
Sec. 4-4-5.	General design requirements	28
Sec. 4-4-6.	New construction	29
Sec. 4-4-7.	New strip centers	29
Sec. 4-4-8	Existing grease retention unit	29
Sec. 4-4-9.	Food service establishments without a grease retention unit	30
Sec. 4-4-10.	New food service establishments in existing buildings	30
Sec. 4-4-11.	Construction standards exceptions	30
ARTICLE C. – GENERAL REQUIREMENTS		31
Sec. 4-4-12.	Right of entry	31
Sec. 4-4-13.	Best management practices	32
Sec. 4-4-14.	Use of enzymes, emulsifiers or other biological additives	32
Sec. 4-4-15.	Inside grease trap cleaning and maintenance requirements	32
Sec. 4-4-16.	Outside grease interceptor cleaning and maintenance requirements	32
ARTICLE D. - COMPLIANCE		34
Sec. 4-4-17.	Maintaining Compliance	34
ARTICLE E. - ENFORCEMENT		34
Sec. 4-4-18.	Enforcement response plan	34
ARTICLE F. – EMERGENCY ACTIONS AND PROCEDURES		35
ARTICLE G. - APPEALS		35
Sec. 4-4-19.	Reconsideration petition	35
Sec. 4-4-20.	Initial appeal	36
ARTICLE H. - EFFECTIVE DATE		36

DRAFT

DISCHARGE CONTROL OF FATS, OILS AND GREASE INTO SANITARY SEWER SYSTEM

ARTICLE A. – GENERAL PROVISIONS

Sec. 4-4-1. - Prohibited Discharge Standards.

(a) The town's sewer use and pretreatment ordinance contain the following limitations on discharges to the sanitary sewer system:

(1) General Prohibitions. No user of the system shall discharge or cause to be discharged into the wastewater system any pollutant or wastewater which causes pass through or interference.

(2) Specific Federal Prohibitions. No user of the system shall discharge or cause to be discharged into the wastewater system the following pollutants, substances, or wastewater: Solid or viscous pollutants in amounts which will cause obstruction to the flow in the wastewater system resulting in interference.

(b) It is the duty and responsibility of the town to prevent the excessive introduction of oil and grease into the sanitary sewer system and the wastewater treatment plant.

(c) This ordinance is designed to outline, implement and enforce oil and grease discharge rules for both residential and commercial property owners and/or food service establishment owners.

(d) The intent of this ordinance is to ensure compliance with the town's sewer use and industrial pretreatment ordinance; ensure compliance with the rules and regulations of the United States Environmental Protection Agency (EPA) and the South Carolina Department of Health and Environmental Control (DHEC) (as relates to fats, oil and grease (FOG)), ensure compliance with the town's NPDES permit requirements; and to protect the town's infrastructure as it relates to the sanitary sewer collection and treatment system.

(e) The accumulation of grease within sanitary sewer lines increases the potential to create sewer blockages. Sand or similar materials and petroleum oils and grease from vehicle cleaning, wash down facilities and other sources also increase the potential to create sewer blockages. Sanitary sewer blockages can result in sanitary sewer overflows (SSOs), which may reach the surface waters of South Carolina. Blockages may also cause wastewater to back up into business establishments, or homes and can result extensive damage.

(f) Food service establishments (FSEs) discharging wastewater that contains grease to the town's sanitary sewer system must install and maintain a grease interceptor or grease trap. All grease traps and grease interceptors shall be maintained for continuous,

satisfactory and effective operation by the property owner and/or FSE owner, leaseholder or operator at his expense.

(g) Sources having the potential for sand or similar materials and petroleum oils and grease to enter the sanitary sewer system must install and maintain sand and/or oil/water separators.

(h) The town reserves the right to make determinations of grease retention unit adequacy and need, based on review of relevant information regarding grease retention performance, maintenance, and facility site and building plan review to require repairs to, modification, or replacement of such grease retention units.

Sec. 4-4-2 Definitions.

(a) Unless the context specifically indicates otherwise, the following terms and phrases, as used in this chapter, shall have the meanings herein designated:

Cost recovery. Those costs associated with the clean-up and/or decontamination of a site after discharge of substances into the sanitary sewer, storm sewer and/or to the environment that caused interference, pass-through or a sanitary sewer blockage. This includes clean up and decontamination of all structures/areas including residential, commercial, surface waters and the environment.

DHEC. The South Carolina Department of Health and Environmental Control.

Domestic Wastewater. Wastewater from sanitary fixtures such as toilets and urinals.

Environmental Protection Agency, or *EPA.* The U.S. Environmental Protection Agency, or where appropriate the term "EPA" may be used to designate the administrator or other duly authorized official of that agency.

Fats, oils, and greases (FOG). Organic polar compounds derived from animal and/or plant sources that contain multiple carbon chain triglyceride molecules. Substances that solidify or become viscous at temperatures between thirty-two degrees Fahrenheit and one hundred fifty degrees Fahrenheit shall be referred to as FOG. Commonly these substances are byproducts generated by the practice of cooking or preparing food. They are also found in such food substances as salad dressings, sauces and marinades, and baking oils and butter products.

Wastewater discharges containing high concentrations of petroleum based oils, grease and sand/grit from food service, automotive and industrial facilities are also incorporated into the definition of FOG. Requirements for providing and maintaining oil / water separators and sand interceptors are also included here.

FOG coordinator. The town's staff member designated to implement the fats, oils and grease control ordinance.

FOG enforcement response plan. The plan that contains detailed procedures indicating how the town will investigate and respond to instances of noncompliance with the FOG control ordinance.

Food service establishment (FSE). Those establishments primarily engaged in activities of preparing, serving, or otherwise making available for consumption food items and that use one or more of the following preparation activities: cooking by frying (all methods), baking (all methods), grilling, sauteing, rotisserie cooking, broiling (all methods), boiling, blanching, roasting, toasting, or poaching. Also included are infrared heating, searing, barbecuing, and any other food preparation activity that produces a hot, non-drinkable food product in or on a receptacle that requires washing. Those establishments that engage in the preparation of precooked and frozen food materials and meat cutting preparation and applicable to all food service establishments that discharge wastewater containing grease to the town's sanitary sewer system including but not limited to the following: restaurants, grocery stores, meat markets, hotels, factory and office building cafeterias, public and private schools, hospitals, nursing homes, commercial day care centers, churches, and catering services.

Garbage Grinder. A device that shreds or grinds up solid or semisolid waste materials into smaller portions for discharge to the sanitary sewer.

Grease. A material composed primarily of fats, oil, and grease from animal or vegetable sources. The terms fats, oil, and grease shall be deemed as Grease by definition. Grease may also include petroleum-based products.

Grease interceptor. Interceptors are grease retention units of the outdoor or underground type and normally consist of a one thousand-gallon or more capacity.

Grease retention unit. A device utilized to affect the separation of grease and oils in wastewater effluent from a food preparation establishment prior to the wastewater entering the sanitary sewer collection and treatment system.

Grease trap. Traps are typically in-floor recessed grease retention units, which are normally less than one hundred gallons capacity. Some older existing traps may be an under the sink or above-floor design.

Hauler or Transporter. One who transfers waste from the site of a user to an approved site for disposal or treatment. The hauler is responsible for assuring that all Federal, State and local regulations are followed regarding waste transport.

Interference. A discharge, which alone or in conjunction with a discharge or discharges from other sources, both: inhibits or disrupts the POTW, its treatment processes or operations, or its sludge processes, use or disposal, and therefore is a cause or contributes to, a violation of any requirement of the POTW's NPDES permit (including an increase in the magnitude or duration of a violation) or any criteria, guidelines or regulations developed pursuant to the Solid Waste Disposal Act (SWDA), the Clean Air Act, 40 CFR Part 503 (Standards for the Use of Disposal of Sewage Sludge), the Toxic Substances Control Act, or more stringent state criteria applicable to the method of sludge disposal employed by the POTW.

NPDES, or *National Pollutant Discharge Elimination System.* A permit issued by DHEC or EPA establishing the volume, characteristics and conditions for the discharge of treated wastewater to waters of the United States.

Ordinance. The town's Fats, Oils and Grease Control Ordinance.

Pass through. A discharge which exits the POTW into waters of the United States in quantities or concentrations which, alone or in conjunction with discharges from other sources, is a cause of a violation of any requirement of the town's NPDES permit, including an increase in the magnitude or duration of a violation.

POTW. Publicly owned treatment works as defined by section 212 of the Act, (33 U.S.C. 1292) which is owned by the town. This definition includes any devices or system used in the collection, storage, treatment, recycling and reclamation of municipal sewage (wastewater) or industrial wastes of a liquid or solid nature. It also includes sewers, pipes and other conveyances only if they convey wastewater to a POTW treatment plant. For the purpose of this ordinance, POTW shall also include any sewers that convey wastewater to the POTW from persons/property owners and/or FSE owners.

Property owner and/or FSE operator. Any person, business, or organization who contributes, causes, or permits the contribution or discharge of wastewater into the POTW. The individual, firm, company, corporation, or group upon whose property the building or structure is located or will be constructed.

Sanitary sewer. A public sewer that carries liquid and waterborne waste from residences, commercial buildings, industrial plants or institutions; together with minor quantities of ground or surface waters that are not intentionally admitted.

Sand. Sand is the heavy mineral material found in wastewater influent to the treatment plant. It consists of gravel, grit, cinders, broken glass, fragments of metal and inorganic solids which have subsiding velocities or specific gravities greater than organic putrescible solids present in wastewater.

Sewer. A pipe or conduit for carrying wastewater.

Storm sewer or *storm drain.* A sewer or drain designed, constructed and intended to carry storm and surface waters and drainage, but not wastewater.

Surface waters. Creeks, streams, lakes or other bodies of water.

Town. The Town of Batesburg-Leesville.

User. A source of discharge to the sanitary sewer system. Users who's operations generate or introduce sand or FOG to the sanitary sewer system may also be called Generators.

Variance for cause request. Submittal provided by a food service establishment to provide site-specific technical information to demonstrate why a grease interceptor is not feasible, practicable, and/or necessary for a particular use, activity and/or structure.

Waste or Wastewater. The liquid and water-carried domestic or industrial wastes from dwellings, commercial establishments, industrial facilities and institutions, whether

treated or untreated. The term's "sewage" and "wastewater" shall be deemed as waste by definition.

Sec. 4-4-3. Applicability.

This Ordinance is applicable to all food service establishments that discharge wastewater containing fats, oils and grease to the town's sanitary sewer system including but not limited to the following: restaurants, grocery stores, meat markets, hotels, factory and office building cafeterias, public and private schools, hospitals, nursing homes, commercial day care centers, churches, and catering services. This Ordinance also applies to automotive, industrial and commercial establishments which discharge petroleum based oils, grease and sand/grit.

ARTICLE B. – GREASE RETENTION UNIT CONSTRUCTION STANDARDS

Sec. 4-4-4. Design and construction.

All new grease interceptors shall be designed and constructed in accordance with the requirements of the town but in no case may be less stringent than the South Carolina Plumbing Code.

Sec. 4-4-5. General design requirements.

(a) General design requirements for all food service establishments.

(1) The town must approve grease, oil and sand retention unit design prior to installation by the user.

(2) All grease retention units, whether singular or two tanks in series, must have each chamber directly accessible from the surface to provide means for servicing and maintaining the retention unit in efficient working and operating condition.

(3) All grease retention units shall be designed and installed to allow for complete access for inspection, cleaning and maintenance of the inner chamber(s) and viewing and sampling of the effluent wastewater discharged to the sanitary sewer system.

(4) A basket, screen, or other intercepting device shall prevent passage into the drainage system of solids one-half (½) inch or larger in size. The basket or device shall be placed in all food preparation sinks and must be removable for cleaning purposes.

(5) Drainage systems conveying sanitary waste (toilets, lavatories, etc.) shall not be connected to the influent side of the grease retention unit.

(6) Where food waste grinders are installed, the waste from those units shall discharge directly into the building drainage system without passing through a grease interceptor. All other fixtures and drains receiving kitchen or food preparation wastewater shall pass through a grease retention unit.

(7) Dishwashers equipped with booster heaters and/or using water in excess of one hundred forty degrees Fahrenheit shall not pass through any grease retention unit with less than a thousand-gallon capacity.

Sec. 4-4-6. New construction.

(a) New food service establishments in new buildings.

(1) All new food service establishments shall be required to install a grease interceptor, unless granted a variance for cause by the town. Any food service establishment wishing to seek a variance for cause must submit a variance for cause request to the FOG Coordinator.

(2) Grease retention units shall be sized in accordance with criteria established or approved by the Town.

(3) No new food service establishments will be allowed to initiate operations until a grease retention unit is installed and approved by the town.

(4) Site plans must be submitted for all new food service establishments to the town. Site plans must be signed and sealed by a South Carolina licensed professional engineer to certify the plan meets all requirements of this Ordinance.

Sec. 4-4-7. New strip centers.

(a) New buildings (strip centers) with the potential for food service establishments.

(1) All new buildings or strip centers containing sections designated for commercial enterprise of the strip center are encouraged to provide a stub-out for a separate waste line for future grease interceptor installation.

(2) The property owner and/or FSE owner of a new strip center shall consider suitable physical property space and sewer gradient that will be conducive for the installation of an exterior, in ground grease interceptor(s) for any flex space contained within the strip center.

Sec. 4-4-8. Existing grease retention unit.

(a) Existing food service establishments with a grease retention unit.

(1) All existing food service establishments with a grease retention unit shall operate and maintain such units in compliance with this Ordinance and shall comply with best management practices.

(2) In the event an existing food preparation establishment's grease retention unit is either under-designed or substandard in accordance with this Ordinance, the property owner and/or FSE will be notified in writing of the deficiencies and required improvements and given a compliance deadline not to exceed 90 days to conform to the requirements of this Ordinance. For cases in which "outdoor" type grease interceptors are infeasible to install, existing food service establishments

will be required to install adequate and approved inside grease traps for use on individual fixtures including sinks and other potentially grease containing drains pending prior approval from the town.

(3) Site plans must be submitted for additions and renovations made to existing facilities. Site plans for additions must be signed and sealed by a South Carolina professional engineer. Site plans for renovations must be signed and sealed by a South Carolina professional architect to ensure the plan meets all requirements of this Ordinance. Improvements made to existing facilities will be evaluated to determine their impact on the grease retention unit. Establishments will be required to install a larger sized unit if the potential daily grease production is significantly increased.

Sec. 4-4-9. Food service establishments without a grease retention unit.

(a) Food service establishments without a grease retention unit.

(1) Food service establishments without a grease retention unit in place on the effective date of this Ordinance shall comply with best management practices. All existing FSEs inside the town's wastewater service area are expected to conduct their operations in such a manner that grease is captured on the user's premises and then properly disposed. The town will inspect each FSE to assure that each facility is complying with the intent of this FOG Ordinance.

(2) In the event an existing food preparation establishment's grease retention unit is either under-designed or substandard in accordance with this Ordinance, the property owner and/or FSE will be notified in writing of the deficiencies and required improvements and given a compliance deadline not to exceed 90 days to conform to the requirements of this Ordinance. For cases in which "outdoor" type grease interceptors are infeasible to install, existing food service establishments will be required to install adequate and approved inside grease traps for use on individual fixtures including sinks and other potentially grease containing drains pending prior approval from the town.

Sec. 4-4-10. New food service establishments in existing buildings.

(a) New food service establishments in existing buildings.

(1) Where practical, food service establishments locating in existing buildings will be required to comply with the requirements applicable to new construction.

(2) Where it is physically impossible to install "outdoor" interceptors, inside grease traps may be allowed provided prior approval of unit type, size, location, etc. is obtained from the FOG Coordinator.

Sec. 4-4-11. Construction standards exceptions.

(a) Construction standards exceptions.

(1) Under certain circumstances, the grease retention unit size and location may necessitate special exceptions to this Ordinance.

(2) If the town determines that an exception to this Ordinance is necessary, the property owner and/or FSE owner must first demonstrate that the proposed size and location will not result in noncompliance with the intent and discharge requirements of this Ordinance.

(3) The facility shall then submit appropriate site plans for any additions or renovations.

ARTICLE C. – GENERAL REQUIREMENTS

Sec. 4-4-12. Right of entry.

(a) The FOG coordinator or their designee, upon presentation of proper credentials shall have right-of-entry subject to this Ordinance for the purpose of inspection, determination of compliance, or other enforcement action. The FOG coordinator or their designee shall be provided ready access to all parts of the premises for the purposes of inspection, monitoring, sampling, ability to establish limits, inventory, records examination and copying, and the performance of any other duties which the FOG coordinator reasonably deems necessary to determine compliance with this Ordinance.

(b) Where security measures are in place which require proper identification and clearance before entry into the premises, the property owner and/or FSE owner shall make necessary arrangements with its security guards so that, upon presentation of proper credentials, the FOG coordinator or their designee will be permitted to enter without delay for the purposes of inspecting the site and investigating any complaints or alleged violations of this Ordinance.

(c) The FOG coordinator or their designee shall have the right to set up on the property such devices as are necessary to conduct sampling and/or metering and shall have the power to require written statements, certificates, certifications, or the filing of reports relating to complaints or alleged violations of this Ordinance.

(d) All grease retention units shall be easily accessible and shall not be obstructed by landscaping, parked cars, or other obstructions. Any temporary or permanent obstruction to safe and easy access to the areas to be inspected and/or monitored shall be removed promptly by the responsible party at the written or verbal request of the FOG coordinator or their designee. The costs of clearing such access shall be borne by the responsible party.

(e) The FOG coordinator also may monitor and inspect any business using or selling cooking oil, any person removing and transporting commercial cooking oil waste or commercial FOG waste and any recycling facility converting commercial cooking oil waste or commercial FOG waste into a marketable product.

Sec. 4-4-13. Best management practices.

Fats, oils and grease can be managed effectively in the food service industry to minimize the discharge to the sewer system and decrease the required maintenance of grease retention units. Best management practices are kitchen cleaning and grease-handling techniques used throughout the industry, and have proven effective when implemented properly and consistently.

Sec. 4-4-14. Use of enzymes, emulsifiers or other biological additives.

The use of any enzymes, grease solvents, thermal sources, emulsifiers, etc. are not considered acceptable grease trap/interceptor maintenance practices and shall not be used as an alternative to the pumping of a grease retention unit, nor as the sole source of grease retention unit maintenance.

Sec. 4-4-15. Inside grease trap cleaning and maintenance requirements.

(a) Grease traps (in floor or under sink) shall be cleaned at least monthly. This required maintenance cleaning frequency can be changed by the FOG coordinator upon written notification to the property owner and/or FSE.

(b) Cleaning of grease traps by property owner and/or FSE owner and/or operators are permissible under the following guidelines:

(c) All property owners and/or FSE owners shall maintain grease trap cleaning records that include: date and time grease trap was cleaned, initials of person who performed the cleaning.

(d) Cleaning records shall be maintained on-site for a period of three continuous years.

(e) Grease and other removed materials shall be disposed of in accordance with State and local requirements. Under no circumstances shall the removed material be introduced to the sewer system.

Sec. 4-4-16. Outside grease interceptor cleaning and maintenance requirements.

(a) All outdoor grease interceptor units shall be cleaned/pumped at least quarterly by a town permitted grease hauler or recycler. This required maintenance cleaning frequency can be changed by the FOG coordinator upon written notification to the property owner and/or FSE.

(b) Cleaning/pumping shall include the complete removal of all contents, including floatable materials, wastewater, sludge and solids. Separation, decanting or back flushing of the grease interceptor or its wastes is prohibited.

(c) The property owner and/or FSE shall be responsible for ensuring that no waste or wastewater pumped from the grease retention unit is reintroduced back into the collection system, into the environment, or is otherwise improperly disposed of.

(d) All outdoor grease interceptors shall be maintained in efficient operation at all times by the property owner and/or FSE at the property owner and/or FSE's expense.

(e) All property owners and/or FSEs shall maintain cleaning/pumping receipt records that include: date and time grease interceptor was cleaned, quantity of grease/materials removal, company or qualified agent providing services.

(1) Cleaning records shall be maintained on-site for a continuous period of three years and copies of cleaning records shall be submitted quarterly to the town FOG coordinator.

(f) Prohibitions and violations.

(1) No property owner and/or FSE shall contribute or cause to be contributed into the sanitary sewer system the following:

a. Hot water running continuously through a grease retention unit.

b. Discharge of concentrated alkaline or acidic solutions into a grease retention unit.

c. Discharge of concentrated detergents into a grease retention unit.

d. Discharge of oils and grease into the sanitary sewer system.

(2) It shall be a violation of this ordinance and the town's Sewer Use and Industrial Pretreatment Ordinances for any person or property owner and/or FSE owner to:

a. Modify a grease retention unit structure without consent from the town.

b. Provide falsified data and/or information to the town, including but not limited to grease retention unit maintenance and/or cleaning records.

c. Violate or fail to comply with any applicable section or provision of this Ordinance.

(g) Notification of change in property ownership or closure of a food service establishment.

(1) A change in property ownership and/or FSE ownership shall be reported to the FOG coordinator in writing within thirty days of the property ownership and/or FSE change.

(2) Any food service establishment that goes out of business shall report such closure to the FOG coordinator in writing within thirty days of closure and shall ensure that any grease trap and/or interceptor shall be cleaned/pumped before the building is vacated.

ARTICLE D. - COMPLIANCE

Sec. 4-4-17. Maintaining compliance.

(a) All food service establishments who are performing and documenting grease retention unit cleaning at the required frequency will be considered to be in full compliance with this Ordinance.

(1) The town will periodically inspect each FSE assure that each facility is complying with the intent of this Ordinance. Inspections may be scheduled or unscheduled.

(b) When an obstruction and/or sanitary sewer overflow occurs, the records of all food service establishments that discharge to the affected sanitary sewer line may be reviewed in order to determine the responsible party. Any food service establishment found to be in noncompliance with the required grease retention unit cleaning frequency shall be deemed a "responsible party" for cost recovery. Payment of cost recovery does not preclude further enforcement actions for noncompliance as per the FOG control ordinance and enforcement response plan.

ARTICLE E.- ENFORCEMENT

Sec. 4-4-18. Enforcement response plan.

(a) Enforcement of this Ordinance shall be in accordance with the provisions of the town's FOG enforcement response plan. Failure to comply with any provision of this Ordinance may be grounds for civil penalty imposition and/or discontinuance of sanitary sewer service.

(b) The FOG coordinator shall develop and implement an enforcement response plan for the town's fats, oils and grease control ordinance. The plan shall contain detailed procedures indicating how the FOG coordinator will investigate and respond to instances of non-compliance with this Ordinance.

(c) The enforcement response plan is a statement of policy by the town. It is not a regulation, code or statute and the town has the authority to amend the policy at any time in order to more effectively implement the FOG control ordinance.

(d) No enforcement procedure is contingent upon the completion of any "lesser" activity.

(e) Nothing in the enforcement response plan shall limit the authority of the FOG coordinator to take any action, including severance of sanitary sewer service without first issuing a notice of violation or other less severe action.

(f) Administrative enforcement activities.
The town is authorized to take the following actions in response to noncompliance with this Ordinance and/or the Sewer Use and Industrial Pretreatment Ordinances:

(1) Written notice to correct (NTC).

(2) Written notice of deficiency (NOD).

(3) Enforcement meeting.

(4) Initiation of self-monitoring.

(5) Employee training requirement.

(6) Notice of violation (NOV).

(7) Civil penalty (up to $2,000.00 per day).

(8) Consent order (may contain schedule of compliance (SOC)).

(9) Administrative order (AO).

(10) Payment of remediation/clean-up costs and/or cost recovery.

(11) Termination of (sewer and/or water) service (TOS).

ARTICLE F. – EMERGENCY ACTIONS AND PROCEDURES

(a) The FOG coordinator is authorized to take all necessary actions to immediately and effectively halt or prevent any fats, oils and grease discharge to the sanitary sewer system, storm water drains and on the ground.

(b) Any property owner and/or FSE owner with grease retention unit maintenance problems or other situations resulting in the discharge of fats, oils, and grease to surface waters must halt discharge immediately. Immediately is defined as within fifteen minutes of becoming aware of the problem. Any repairs to the system must be completed within forty-eight hours, at the expense of the food service establishment, property owner or leaseholder.

ARTICLE G. - APPEALS

Sec. 4-4-19. Reconsideration petition.

(a) Any property owner and/or FSE owner may petition the FOG coordinator to reconsider the terms of any enforcement action within thirty calendar days of issuance.

(b) Failure to submit a timely petition for review shall be deemed to be a waiver of the administrative appeal process.

(c) The petition shall indicate the terms objected to, the reasons for the objection and any additional information that should be considered.

(d) If the FOG coordinator fails to act within fifteen days of receipt, the request for reconsideration is deemed to be denied.

Sec. 4-4-20 Initial appeal.

(a) Any property owner and/or FSE owner whose reconsideration petition to the FOG coordinator has been denied shall have the right to a hearing before the town upon making written demand to the town within thirty days of receipt of the denial. The written demand shall identify the specific enforcement action issues to be contested and any additional information that should be considered.

(b) Unless such written demand is made within the time specified herein, the action shall be final and binding.

(c) The Town Manager shall conduct the hearing and make a final decision on the enforcement action within fifteen days of the hearing. The property owner and/or FSE owner shall be notified of the decision in writing.

ARTICLE H. – EFFECTIVE DATE

This ordinance shall be in full force and effect immediately following its passage, approval, and publication, as provided by law.

DRAFT

Appendix B

DISCHARGE PERMIT APPLICATION

Use this form for initial Permit Application. For Permit renewals, use the **Permit Renewal Application** (Appendix G). Please complete and sign this Permit Application and submit along with the **Annual Grease Hauling Agreement Summary Form** (Appendix E) and the Initial Application Permit fee.

DRAFT

THE TOWN OF
Batesburg-Leesville

DEPARTMENT OF PUBLIC WORKS

TOWN OF BATESBURG-LEESVILLE
DISCHARGE PERMIT APPLICATION

RETURN THIS FORM TO:
Town of Batesburg-Leesville
120 West Church Street, Suite A
Batesburg-Leesville, SC 29006

DRAFT

SECTION A – GENERAL INFORMATION (Please print legibly)

1. Business Establishment Name: _____ Store No. _____
2. Business Establishment Mailing Address:
   Street or P.O. Box: _____
   City: _____ State: _____ Zip: _____
   Telephone No.: _____ Website: _____
3. Business Establishment Physical Address (if different from above):
   Street: _____
   City: _____ State: _____ Zip: _____
4. Owner of Business Establishment:
   Name: _____
   Street: _____
   City: _____ State: _____ Zip: _____
   Telephone No.: _____ Email Address: _____
5. Owner of Premises (if different from above):
   Name: _____
   Street: _____
   City: _____ State: _____ Zip: _____
   Telephone No.: _____ Email Address: _____
6. Designated Business Establishment Signatory Authority:
   Name: _____
   Title: _____
   Street: _____
   City: _____ State: _____ Zip: _____
   Telephone No.: _____ Email Address: _____

7. Designated Business Establishment Contact:
   Name: _____
   Title: _____
   Telephone No.: _____ Email address: _____

SECTION B – FACILITY OPERATIONAL CHARACTERISTICS

1. Please choose one description that best describes your facility:
   - [ ] Fast Food Restaurant
   - [ ] Full Service Restaurant
   - [ ] Drive-through / Take-out only Restaurant
   - [ ] Seasonal Restaurant
   - [ ] Coffee Shop
   - [ ] Bakery
   - [ ] Supermarket
   - [ ] Religious Institution
   - [ ] Nursing Home / Assisted Living Facility
   - [ ] Hotel / Motel
   - [ ] School
   - [ ] Club / Organization
   - [ ] Company / Office Building
   - [ ] Ice Cream Shop
   - [ ] Hospital
   - [ ] Other _____

2. Please indicate each item you currently have or will install in your facility and the number of each:
   - [ ] Grill _____ Grease Tray / Drawer _____
     Grease Disposal Method _____
   - [ ] Range / Stove _____ Number of Burners _____
   - [ ] Dishwasher _____
   - [ ] Pre-rinse Sink _____ Waste Trap / Basket _____
   - [ ] Mop Sink / Can Wash _____
   - [ ] Deep Fryer _____ Size _____ Baskets per Fryer _____
     Oil Disposal Method _____
   - [ ] Number of Floor Drains _____ Screened _____
     Screens installed with screws, liquid nail, etc. _____
   - [ ] Tilt Kettle / Crock Pot _____
     Grease Disposal Method _____
   - [ ] Garbage Disposal _____
   - [ ] 3 Compartment Pot Sink _____
   - [ ] 2 Compartment Pot Sink _____
   - [ ] Single Compartment Sink _____
   - [ ] Tub Sink _____
   - [ ] Hand Wash Sink _____
   - [ ] Other Equipment (Woks, etc.) _____

DRAFT

3. **Please provide a copy of the indoor and outdoor plumbing flow diagrams, which should include the location of all water meters, facility sewer connections, grease interceptors, sinks, floor drains, dishwashers, restrooms, etc.**

4. Seating Capacity _____

5. Days and hours of operation and number and time of shifts _____
_____
_____

6. Number of employees _____

SECTION C – WASTEWATER DISCHARGE INFORMATION

1. Please check the item which best describes your wastewater discharge:
   [ ] Existing Sewer Discharge
   [ ] Existing Septic System
   [ ] Proposed (New) Sewer Discharge
   Estimated monthly wastewater discharge (gallons) _____

2. Are there any changes or expansions planned in the next three years that could alter the wastewater volume or characteristics?
   [ ] Yes
   [ ] No
   If Yes, briefly describe the changes and their effects on the wastewater volume and characteristics: _____
   _____
   _____

DRAFT

SECTION D – TREATMENT – GREASE REMOVAL DEVICE (GRD)

1. Do you currently have an indoor grease trap?
   [ ] Yes
   [ ] No
   If Yes, Make and Model: _____
   Location (kitchen, parking lot, etc.): _____
   Capacity of grease removal device (gallons): _____

   Do you currently have an **OUTDOOR** grease interceptor?
   [ ] Yes
   [ ] No
   If Yes, Make and Model: _____
   Location (kitchen, parking lot, etc.): _____
   Capacity of grease removal device (gallons): _____

2. If you have an **INDOOR** grease trap, how do you dispose of the waste after cleaning the trap?
   [ ] Trash
   [ ] Contractor disposes of grease
   [ ] Recycle
   [ ] Other (explain): _____

3. If a contractor pumps and/or cleans the **INDOOR** or **OUTDOOR** grease removal device(s), please list the following:

   Name of Contractor: _____
   Address: _____
   City: _____ State: _____ Zip: _____

   Please note all grease removal devices shall be easily accessible and shall not be obstructed by landscaping, parked cars, shelving, or other obstructions. Any temporary or permanent obstruction to safe and easy access to the areas to be inspected and/or monitored shall be removed promptly by the responsible party at the written or verbal request of the Town. The costs of clearing such access shall be borne by the responsible party.

4. If your facility has grills / ovens, which type of exhaust cleaning system do you use?
   [ ] Automatic
   [ ] Manual

5. Are any additives placed in the plumbing, grease interceptor, or grease trap (i.e. enzymes, bacteria, etc.)?
   [ ] Yes
   [ ] No

6. If you answered "Yes" to Question 5. above, please complete the following and attach Material Safety Data Sheets (MSDS) for each product:

   Name of Additive: _____
   Location where additive is placed: _____
   Frequency additive is used: _____

DRAFT

SECTION F – RECYCLING

1. Do or will you recycle the grease produced at your facility?
   [ ] Yes
   [ ] No

   If Yes, name of company that recycles your grease: _____

2 Recycling container on site:
   [ ] Yes
   [ ] No

   If Yes, number and location: _____

3. Have pollution prevention measures (Best Management Practices) been implemented?

   [ ] Yes
   [ ] No

   If Yes, please describe: _____

   _____

PLEASE ATTACH A COPY OF YOUR MENU.

Authorized Representative Statement:

I certify that I understand that food service establishments may be required to have a grease removal device before being allowed to discharge wastewater containing fats, oil, and grease to the Town of Batesburg-Leesville sewer system. I further certify under penalty of law that this document and all attachments were prepared under my direct supervision in accordance with a system designed to assure that qualified personnel properly gather and evaluate the information submitted. Based on my inquiry of the person or persons who manage the system, or those persons directly responsible for gathering the information, the information submitted is, to the best of my knowledge and belief, true, accurate, and complete. I am aware that there are significant penalties for submitting false information, including the possibility of fine and/or imprisonment for knowing violations.

Name: _____

Title: _____

Signature: _____ Date: _____

DRAFT

Appendix C

TYPICAL GREASE INTERCEPTOP AND OIL / WATER SEPERATOR

SINGLE CHAMBER

DRAFT

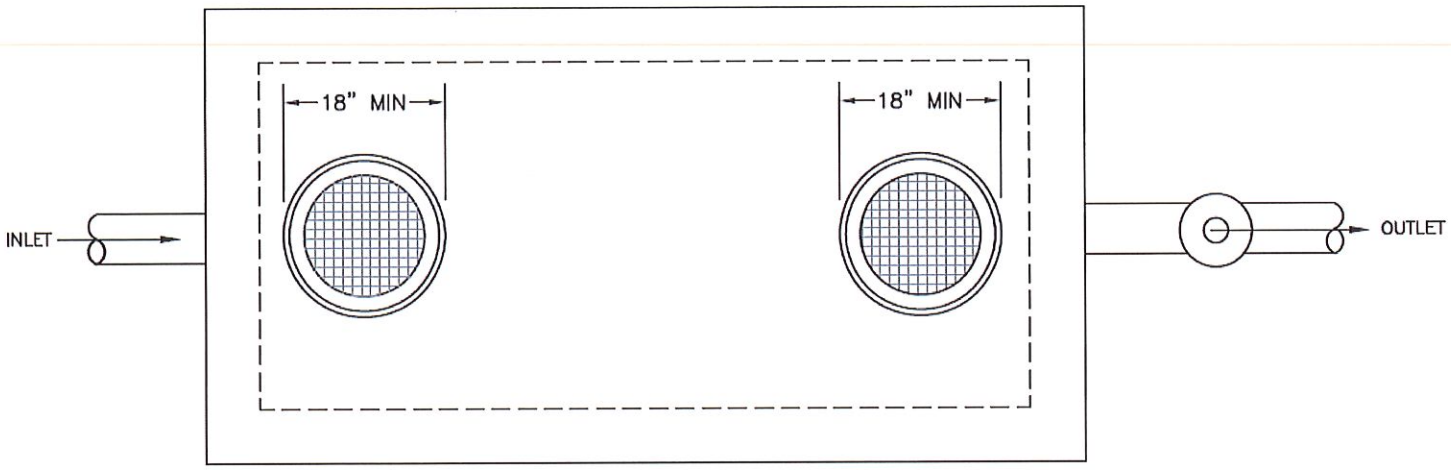

PLAN

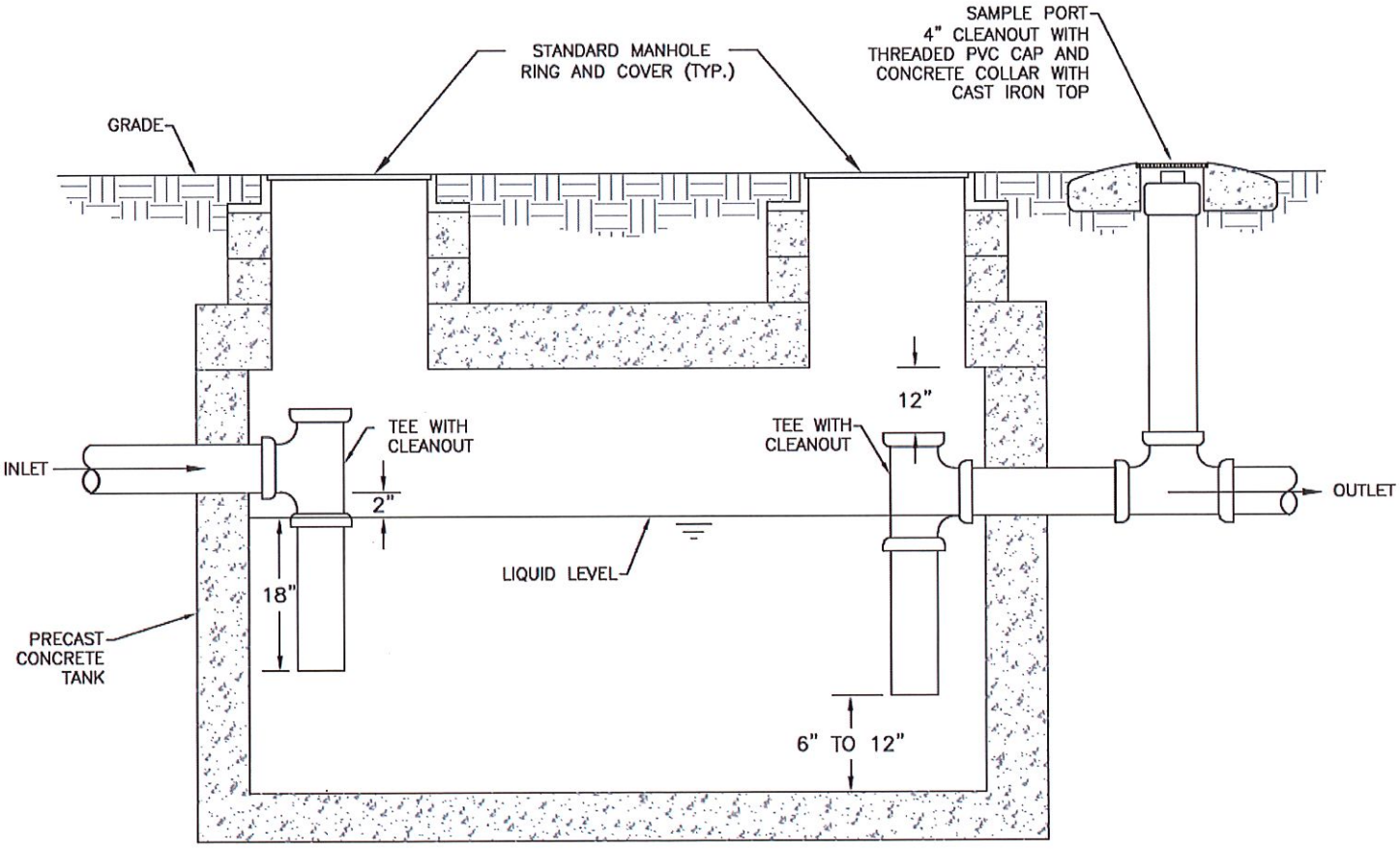

ELEVATION

THE TOWN OF Batesburg-Leesville	**TYPICAL GREASE INTERCEPTOP AND OIL / WATER SEPERATOR SINGLE CHAMBER**	SCALE: NOT TO SCALE DATE: OCTOBER 2020

Appendix D

TYPICAL GREASE INTERCEPTOR AND OIL / WATER SEPERATOR

DOUBLE CHAMBER

DRAFT

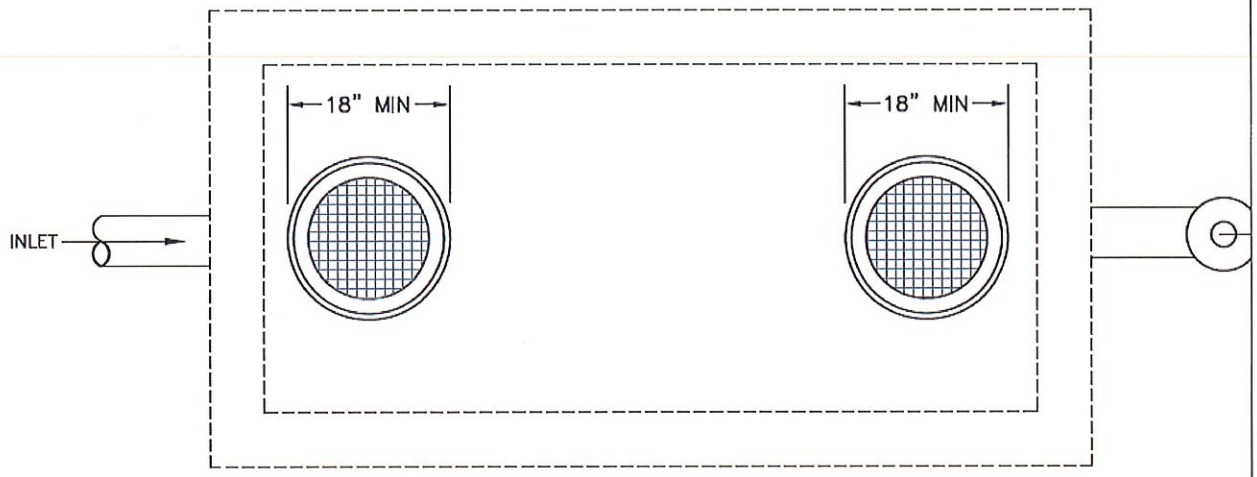

PLAN

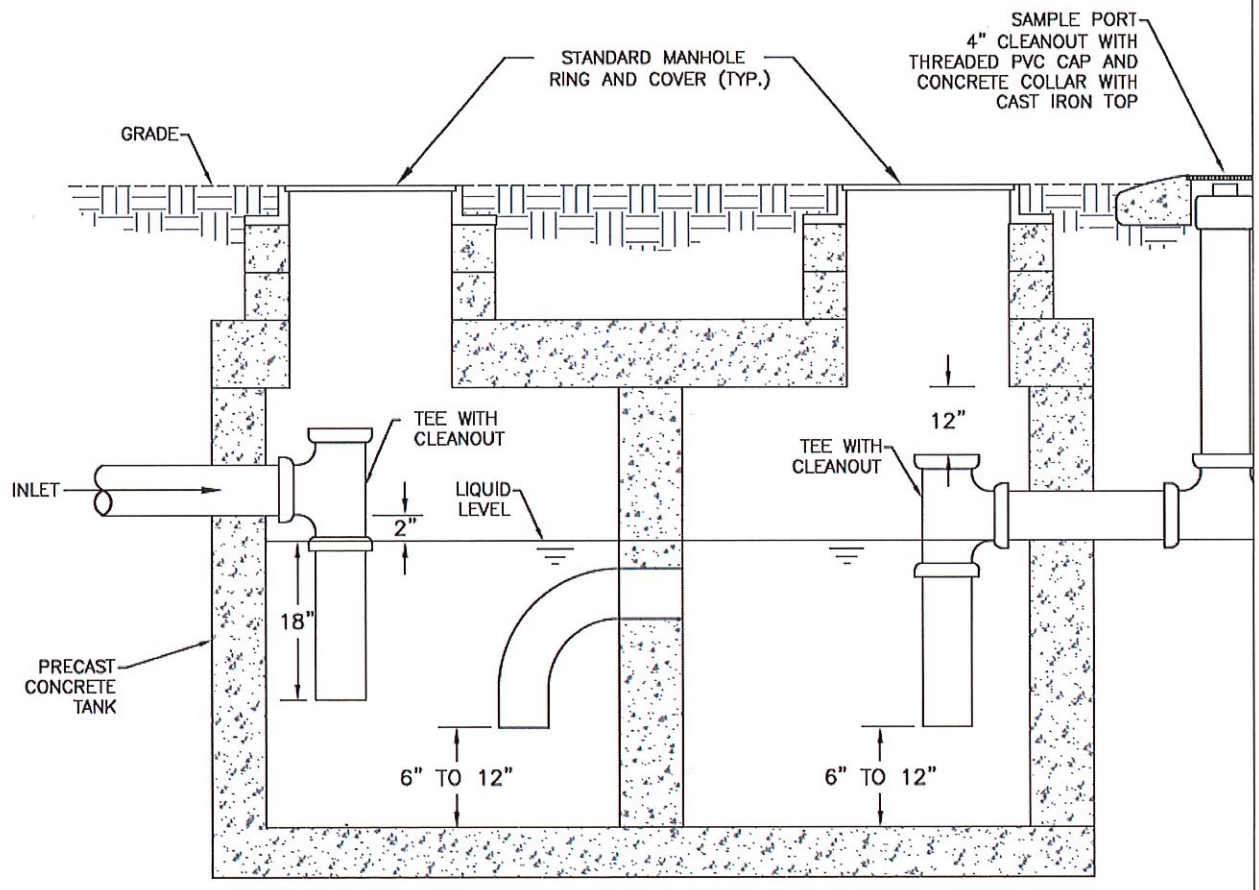

ELEVATION

THE TOWN OF Batesburg-Leesville	**TYPICAL GREASE INTERCEPTOR AND OIL / WATER SEPERATOR DOUBLE CHAMBER**	SCALE: NOT TO SCALE DATE: OCTOBER 2020

Appendix E

ANNUAL GREASE HAULING AGREEMENT

SUMMARY FORM

DRAFT

THE TOWN OF Batesburg-Leesville

ANNUAL GREASE HAULING AGREEMENT SUMMARY FORM

All grease generators having interceptors shall perform all business transactions relating to interceptor pumping, cleaning, servicing, liquid waste collections, transportation and disposal on a contractual basis via a written contract having a duration of at least one year.

CUSTOMER (GENERATOR)

Name of Business: _____

Business Address: _____

Mailing Address: _____

Primary Contact: _____ Phone No.: _____

Email: _____

Secondary Contact: _____ Phone No.: _____

Email:

GREASE HAULER

Name of Business: _____

Business Address: _____

Mailing Address: _____

Primary Contact: _____ Phone No.: _____

Email: _____

CONTRACT SUMMARY

Generator Permit No.: _____

Date of Agreement: _____

Cleaning Frequency: _____

Duration of Agreement: _____

Note: If necessary, use the following page to include a diagram showing the location of the interceptor(s) that are to be serviced.

Please attach a copy of the signed agreement and send to:

Town of Batesburg-Leesville
120 West Church Street, Suite A
Batesburg-Leesville, SC 29006

DRAFT

ANNUAL GREASE HAULING AGREEMENT SUMMARY
INTERCEPTOR(S) DIAGRAM

1. Draw the location of the interceptor(s) for this establishment.
2. Indicate the type (internal or external) and size (gallons) next to each interceptor.

DRAFT

Appendix F

GREASE HAULER MANIFEST
AND INSPECTION REPORT

DRAFT

THE TOWN OF Batesburg-Leesville

GREASE HAULER MANIFEST AND INSPECTION REPORT

Date: _____

FACILITY INFORMATION

Permit No.: _____
Business Name: _____
Business Address: _____
Contact Name: _____ Phone: _____
Email: _____

FACILITY TYPE *(Check all that apply)*

Full Service Restaurant	☐	Caterer	☐	Commercial Food Preparation	☐
Fast Food	☐	Bakery	☐	Institutional Facility	☐
Grocery Store	☐	Deli	☐	Other: _____	☐

INTERCEPTOR CONDITION

Thickness of grease cap (top): _____ Inches			Bottom solids: _____ Inches	
Walls and bottom condition:	☐ Good	☐ Needs Repair		
Inlet/outlet pipes intact and in place?	☐ Yes	☐ Needs Repair		
Baffle intact and unobstructed?	☐ Yes	☐ Needs Repair		☐ N/A
Inspection cover in place on exit line?	☐ Yes	☐ Needs Repair		

SERVICES PERFORMED

☐ Interceptor pumped and cleaned
☐ Liquids hauled away _____ Gallons
☐ Solids hauled away _____ Gallons

DISPOSAL LOCATION

Company Name: _____
Company Address: _____ Phone No.: _____

VERIFICATION OF SERVICE:

This is to certify that the above information is accurate and that the grease interceptor was pumped out and cleaned by the hauler of record on the date stated herein. I understand that falsification of this information is a violation and is subject to enforcement.

WASTE HAULER INFORMATION:

Company Name: _____
Company Address: _____ Phone No.: _____
Driver's Name: _____ Date: _____
Signature: _____

The Generator shall maintain a copy of this completed form onsite in the Grease Interceptor record log. A copy of this report must be provided to:

Town of Batesburg-Leesville
120 West Church, Suite A
Batesburg-Leesville, SC 29006

DRAFT

Appendix G

FOG INTERCEPTOR DISCHARGE PERMIT

RENEWAL APPLICATION

DRAFT

Use this form for Permit Renewal Application. For Initial Permit applications , use the **Discharge Permit Application** (Appendix B). Please complete and sign this Permit Application and submit along with the **Annual Grease Hauling Agreement Summary Form** (Appendix E) and the Permit Renewal fee.

THE TOWN OF Batesburg-Leesville

FOG INTERCEPTOR DISCHARGE PERMIT RENEWAL APPLICATION

Date: _____

FACILITY INFORMATION

Permit No.: _____
Business Name: _____
Business Address: _____
Contact Name: _____ Phone: _____
Email: _____

FACILITY TYPE *(Check all that apply)*

Full Service Restaurant	☐	Caterer	☐	Commercial Food Preparation	☐
Fast Food	☐	Bakery	☐	Institutional Facility	☐
Grocery Store	☐	Deli	☐	Other: _____	☐

INTERCEPTOR OPERATION

Current condition of interceptor? ☐ Good ☐ Needs Repair (*explain in notes below*)

Any issues/violations in past year? ☐ Yes ☐ Needs Repair (*explain in notes below*)

Date of last cleaning? _____

Notes:

DRAFT

PERMIT RENEWAL CHECKLIST

- ☐ Annual Grease Hauling Summary Form and Signed Contract
- ☐ Annual Interceptor Inspection Report
- ☐ Annual Renewal Fee

Please submit this completed application with all required attachments to:

Town of Batesburg-Leesville
120 West Church Street, Suite A
Batesburg-Leesville, SC 29006

Appendix H

FOG INTERCEPTOR
ANNUAL INSPECTION FORM

DRAFT

THE TOWN OF Batesburg-Leesville

FOG INTERCEPTOR ANNUAL INSPECTION FORM

Date: _____

FACILITY INFORMATION

Permit No.: _____ Permit Expiration Date: _____

Business Name: _____

Business Address: _____

Contact Name: _____ Phone: _____

Email: _____

INTERCEPTOR INFORMATION

Accessible for maintenance/cleaning?	☐	Yes	☐	No
General cleanliness of area?	☐	Good	☐	Needs attention *(explain in notes below)*
Condition of access hatches?	☐	Good	☐	Needs Repair *(explain in notes below)*
Condition of inlet/outlet pipes?	☐	Good	☐	Needs Repair
Condition of interior walls, floor, top?	☐	Good	☐	Needs Repair
Photos attached?	☐	Yes	☐	No

Notes: _____

☐ Liquids hauled away _____ Gallons

☐ Solids hauled away _____ Gallons

DISPOSAL LOCATION

Company Name: _____

Company Address: _____ Phone No.: _____

VERIFICATION OF SERVICE:

This is to certify that the above information is accurate and that the grease interceptor was pumped out and inspected by the waste hauler of record on the date stated herein.

VERIFICATION OF SERVICE:

This is to certify that the above information is accurate and that the grease interceptor was pumped out and inspected by the waste hauler of record on the date stated herein.

Company Name: _____ Phone No.: _____

Inspector's Name: _____

Signature: _____

A copy of this report, including photographs, must be sent to:

Town of Batesburg-Leesville
120 West Church Street, Suite A
Batesburg-Leesville, SC 29006

DRAFT

Appendix I

METHOD FOR MEASURING GREASE ACCUMULATION

DRAFT

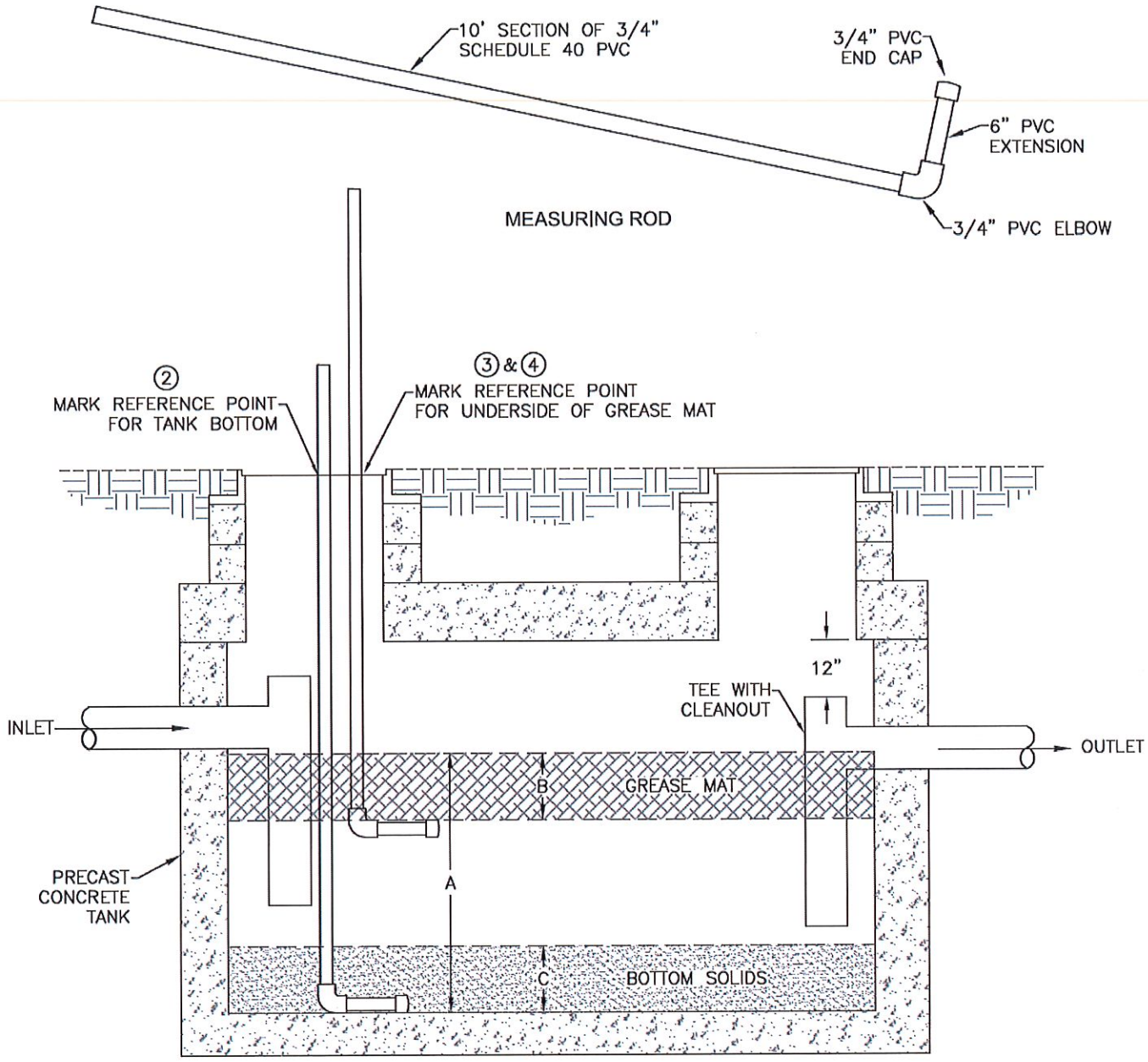

1. REMOVE ACCESS OPENING AND PUSH MEASURING ROD THROUGH GREASE MAT UNTIL CONTACT IS MADE WITH TANK BOTTOM.
2. MARK A REFERENCE POINT ON MEASURING ROD TO INDICATE LEVEL OF TANK BOTTOM.
3. ROTATE MEASURING ROD 1/4 TURN AND SLOWLY RAISE UNTIL CONTACT IS MADE WITH UNDERSIDE OF GREASE MAT.
4. MARK A REFERENCE POINT ON MEASURING ROD TO INDICATE LEVEL OF GREASE MAT UNDERSIDE.
5. MEASURE THE DISTANCE BETWEEN THE TWO REFERENCE POINTS. THIS INDICATES THE DISTANCE OF THE GREASE MAT ABOVE THE TANK BOTTOM.
6. IF IT IS DETERMINED THAT THE GREASE MAT HAS ACCUMULATED TO WITHIN 3 FT. OF THE TANK BOTTOM, THEN THE OWNER/MANAGER SHALL BE REQUIRED TO THOROUGHLY REMOVE THE GREASE FROM THE TANK(S).
7. IF IT IS IMPOSSIBLE TO PENETRATE THE GREASE MAT AS SPECIFIED IN ITEM 1, THEN THE OWNER/MANAGER SHALL BE REQUIRED TO THOROUGHLY REMOVE THE GREASE FROM THE TANK(S).

THE TOWN OF Batesburg-Leesville	**METHOD FOR MEASURING GREASE ACCUMULATION**	SCALE: NOT TO SCALE DATE: OCTOBER 2016

Appendix J

METHOD FOR MEASURING SAND INTERCEPTOR ACCUMULATION

DRAFT

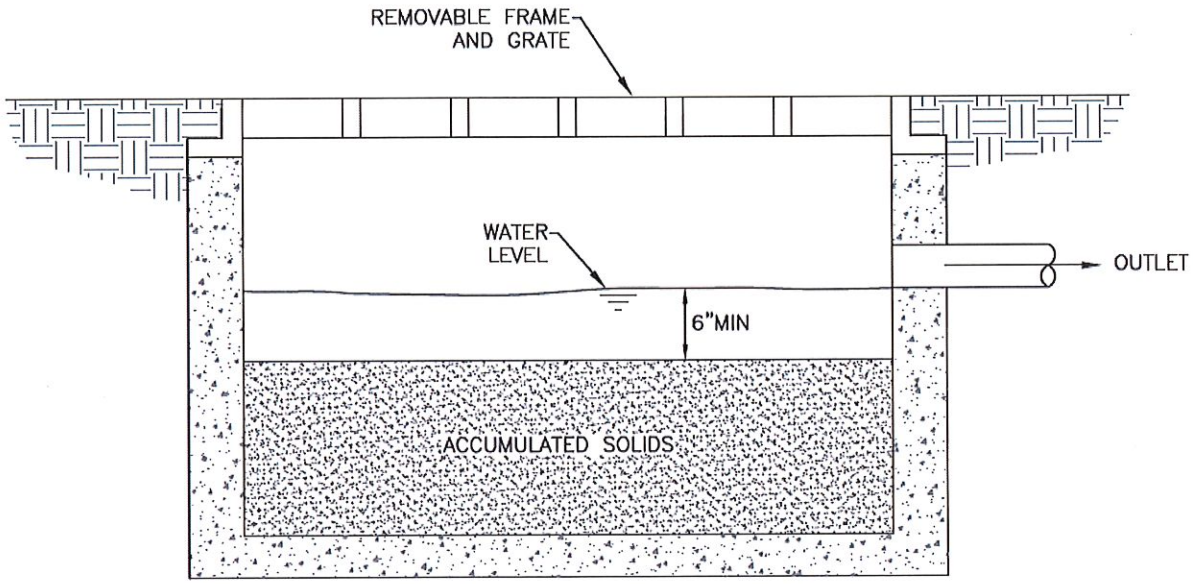

1. REMOVE GRATE IF NEEDED AND MEASURE FROM TOP OF ACCUMULATED SOLIDS TO BOTTOM OF OUTLET PIPE.
2. IF SOLIDS HAVE ACCUMULATED TO WITHIN 6 INCHES OF OUTLET PIPE, INTERCEPTOR MUST BE CLEANED.

THE TOWN OF Batesburg-Leesville	**METHOD FOR MEASURING SAND INTERCEPTOR ACCUMULATION**	SCALE: NOT TO SCALE DATE: OCTOBER 2016

Appendix K

FOG INSPECTION REPORT

This Inspection Report form is to be used by the Town in performing their periodic scheduled or unscheduled inspections.

DRAFT

THE TOWN OF Batesburg-Leesville

FOG INSPECTION REPORT

INSPECTION TYPE

☐ ROUTINE INSPECTION ☐ REINSPECTION
☐ PREOPERATIONAL ☐ OTHER

Date and Time: _____

NAME OF ESTABLISHMENT: _____

STREET ADDRESS: _____

OWNER OR LOCAL DESIGNEE: _____

FAX NUMBER: _____ EMAIL: _____

LAST INSPECTION:

Date: _____ Comments: _____

Type: _____

Result: _____

GREASE TRAP OPENED ☐ YES ☐ NO

Based on today's inspection, the violations in facilities or operation, as marked below, must be corrected prior to the re-inspection date indicated below.

Grease Disposal		**Comments**
101	Grease trap maintenance log not available	
102	Grease trap not cleaned	
103	Grease trap needs repairs	
104	Renderable grease container not available	
105	Prohibited chemicals used	
106	Poor grease handling procedures	
107	Unauthorized equipment use/modification	
108	Equipment Installation Violation	
109	Excessive Odors for Grease Equipment	
110	Other	

Additional Comments: _____

Follow up Inspection Date (If Needed): _____

Overall Rating: ☐ Satisfactory ☐ Unsatisfactory

_____ Signature of Person in Charge

_____ Signature of Inspector

DRAFT

Appendix L

GREASE/SAND HAULER PERMIT APPLICATION

DRAFT

THE TOWN OF
Batesburg-Leesville

GREASE/SAND HAULER PERMIT APPLICATION

RETURN THIS FORM TO:
Town of Batesburg-Leesville
120 West Church Street, Suite A
Batesburg-Leesville, SC 29006

SECTION A – GENERAL INFORMATION (Please print legibly)

1. Grease Hauler Name: _____
2. Grease Hauler Mailing Address:
   Street or P.O. Box: _____
   City: _____ State: _____ Zip: _____
   Telephone No.: _____ Website: _____
3. Grease Hauler Physical Address (if different from above):
   Street: _____
   City: _____ State: _____ Zip: _____
4. Owner of Grease Hauler Business:
   Name: _____
   Street: _____
   City: _____ State: _____ Zip: _____
   Telephone No.: _____ Email Address: _____
5. Owner of Grease Hauler Premises (if different from above):
   Name: _____
   Street: _____
   City: _____ State: _____ Zip: _____
   Telephone No.: _____ Email Address: _____
6. Designated Grease Hauler Signatory Authority:
   Name: _____
   Title: _____
   Street: _____
   City: _____ State: _____ Zip: _____
   Telephone No.: _____ Email Address: _____

DRAFT

7. Designated Grease Hauler Contact:
   Name: _____
   Title: _____
   Telephone No.: _____ Email Address: _____

SECTION B – VEHICLE INFORMATION: (Please print legibly)
(Attach additional sheets if necessary)

Vehicle Type	Truck No.	License Tag No.	SCDHEC Vehicle ID No.	Capacity (gallons)

SECTION C – APPROVED DISPOSAL FACILITIES (Please print legibly)
(If more than two disposal sites, attach additional sheets as necessary to include the information below)

DISPOSAL FACILITY No. 1

1. Disposal Facility Name: _____
2. Disposal Facility Mailing Address:
   Street or PO Box: _____
   City: _____ State: _____ Zip: _____
   Telephone No.: _____ Website: _____
3. Disposal Facility Physical Address (if different from 2 above):
   Street: _____
   City: _____ State: _____ Zip: _____
4. Owner of Disposal Business:
   Name: _____
   Street: _____
   City: _____ State: _____ Zip: _____
   Telephone No.: _____ Email Address: _____
5. Owner of Disposal Premises (if different from 4 above):
   Name: _____
   Street: _____
   City: _____ State: _____ Zip: _____
   Telephone No.: _____ Email Address: _____
6. Designated Disposal Facility Signatory Authority:
   Name: _____
   Title: _____
   Street: _____
   City: _____ State: _____ Zip: _____
   Telephone No.: _____ Email Address: _____

DRAFT

7. Designated Disposal Facility Contact:
   Name: _____
   Title: _____
   Street: _____
   City: _____ State: _____ Zip: _____
   Telephone No.: _____ Email Address: _____

DISPOSAL FACILITY No. 2

1. Disposal Facility Name: _____
2. Disposal Facility Mailing Address:
   Street or PO Box: _____
   City: _____ State: _____ Zip: _____
   Telephone No.: _____ Website: _____
3. Disposal Facility Physical Address (if different from 2 above):
   Street: _____
   City: _____ State: _____ Zip: _____
4. Owner of Disposal Business:
   Name: _____
   Street: _____
   City: _____ State: _____ Zip: _____
   Telephone No.: _____ Email Address: _____
5. Owner of Disposal Premises (if different from 4 above):
   Name: _____
   Street: _____
   City: _____ State: _____ Zip: _____
   Telephone No.: _____ Email Address: _____
6. Designated Disposal Facility Signatory Authority:
   Name: _____
   Title: _____
   Street: _____
   City: _____ State: _____ Zip: _____
   Telephone No.: _____ Email Address: _____
7. Designated Disposal Facility Contact:
   Name: _____
   Title: _____
   Street: _____
   City: _____ State: _____ Zip: _____
   Telephone No.: _____ Email Address: _____

Attach written proof (acceptance letter, etc.) that you have been granted permission to use the approved disposal facilities.

DRAFT

SECTION D – RECORD KEEPING

A Food Service Establishment (FSE) may authorize a **Registered Grease Hauler** to act on its behalf regarding inspection, disposal, and maintenance records, and reporting requirements. Grease Hauler Reports shall include estimated depth of grease and solids, quantity of water removed from Grease Removal Device (GRD), any defects in the GRD (baffle missing, tees missing, no outlet access, etc.), date of pump-out of GRD, capacity of GRD, and the name and address of the FSE contact. Each report shall also note any repairs that have been made to the interceptor or trap, including the date repairs were affected. Reports shall be submitted to the address provided in the permit. If no pumping activities have been performed, please submit a report stating "No Pumping Performed". **If reports are received by the Town more than 15 days after the end of the month, enforcement actions, including penalties, may be applied by the FMP Official**.

Authorized Representative Statement:

I certify that I have read the Town of Batesburg-Leesville Fats, Oil, and Grease Ordinance and Policy and agree to abide by the regulations contained therein, as well as any other applicable Federal, State, or local regulations governing my activities, I understand that all Grease Waste Haulers must have a Grease Hauler Permit (GHP) issued by the Town prior to providing grease hauler services within the Town's sewer collection system service area. I recognize it shall be prohibited for any grease hauler to clean or pump out any Grease Control Device within the Town's sewer collection system service area without a current GHP.

I further understand, under penalty of law, that this document and all attachments were prepared under my direct supervision in accordance with a system designed to assure that qualified personnel properly gather and evaluate the information submitted. Based on my inquiry of the person or persons who manage the system, or those persons directly responsible for gathering the information, the information submitted is, to the best of my knowledge and belief true, accurate, and complete. I am aware that there are significant penalties for submitting false information, including the possibility of fine and/or imprisonment for knowing violations.

Print Name: _____

Print Title: _____

Signature: _____ Date: _____

DRAFT